NB-QXHY
宁波千祥汇亚国际贸易有限公司
浙江省宁波市鄞州区天健巷 26 号汇鼎大厦 1517 室

PVC inside (mm)	size (inch)	ANSI outside diameter (mm)	diameter cns standard		BS outside diameter (mm)	JS standard		DINstandard	
			outside diameter (mm)	wall thickness (mm)		outside diameter (mm)	wall thickness (mm)	outside diameter (mm)	wall thickness (mm)
10	3/8”	17.14	18±0.2	2.2±0.6	17.14	18±0.2	2.5±0.2	16±0.2	
15	1/2”	21.34	22±0.2	2.7±0.6	21.34	22±0.2	3.0±0.3	20±0.2	3.0±0.3
20	3/4”	26.67	26±0.2	2.7±0.6	26.67	26±0.2	3.0±0.3	25±0.2	3.0±0.3
25	1”	33.4	34±0.3	3.2±0.6	33.4	32±0.2	3.5±0.3	32±0.2	3.5±0.4
32	1+1/4”	42.16	42±0.3	3.2±0.6	42.16	38±0.3	3.5±0.3	40±0.2	3.5±0.4
40	1+1/2”	48.26	48±0.4	3.6±0.8	48.26	48±0.4	4.0±0.4	50±0.2	4.0±0.4
50	2”	60.32	60±0.5	4.1±0.8	60.32	60±0.5	4.5±0.4	63±0.3	4.5±0.4
65	2+1/2”	73.02	76±0.5	4.1±0.8	73.02	76±0.5	4.5±0.4	75±0.3	4.5±0.4
80	3”	88.9	89±0.5	5.1±0.8	88.9	89±0.5	5.9±0.4	90±0.3	5.9±0.4
100	4”	114.3	114±0.6	6.6±1.0	114.3	114±0.6	7.1±0.5	110±0.3	7.1±0.5
125	5”	141.3	140±0.8	7.5±1.2	141.3	140±0.8	7.5±0.5	140±0.4	7.5±0.5
150	6”	168.28	165±1.0	8.5±1.4	168.28	165±1.0	9.6±0.7	160±0.4	9.6±0.7
200	8”	219.08	216±1.3	10.5±1.4	219.08	216±1.3	11.0±0.7	225±0.5	11.0±0.7
250	10”	273.05	267±1.6	13.0±1.8	273.05	267±1.6	13.6±0.9	250±0.5	13.6±0.9

NINGBO QIANXIANG HUIYA INTERNATIONAL TRADE CO., LTD
ROOM 1517, HUIDING BUILDING, 26 TIANJIAN LANE, YINZHOU DISTRICT,
NINGBO CITY, ZHEJIANG PROVINCE, CHINA

Tel: 0086-574-88209527
WhatsApp: 0086-18867873336
Email: sales@nbqxhy.com
https: //qxvalve.en.made-in-china.com

NB-QXHY

QUALITY PRODUCTS
QUALITY WATER
QUALITY LIFE

- UPVC VALVE
- UPVC PIPE FITTINGS WATER SUPPLE
- UPVC PIPE FITTINGS FOR DRAINAGE
- PP FITTING AND PP CLAMP SADDLE
- SPRINKLER AND HOSE NOZZLES
- IRRGATION ACCESSORIES

2020 collection

NINGBO QIANXIANG HUIYA INTERNATIONAL TRADE CO., LTD

located in Ningbo Zhejiang Province, China, is a professional supplier of Plastic Plumbing, include UPVC, PP, PPR valve, fittings and pipes for irrigation, construction, water treatment, swimming pool, and others related products.

As a company that focuses on innovation and quality, we strictly control product quality, follow product testing, and focus on product production experience, production details, packaging details, and text advertising creativity. Pay attention to the long-term development of products, as well as the product life, easy operation, clean energy and environmental protection.

We can guarantee to provide our customers with competitive prices, Prompt delivery, Various products and professional service. We supply ONE- STOP SERVICE OF valve- fittings- pipes, which mean we supply customers complete range of all these products, related sourcing, and other services.

With 10 years of experience to export, computerized equipment and strict quality control, these factories all had been qualified for the ISO9001, 2000 international standard.

Most of our products are widely distributed to more than 50 countries & area, main market in South America, North America, Africa, Middle East, Southeast Asia.

NB-QXHY has always hold its belief of quality products, quality water, quality life, to Bring more wonderful products to the global village, a green future!

COMPANY HISTORY

2015
High-level positioning of product quality requirements, focus on long-term product life, and development of a global export service our products!

2018
The sales volume of the company reached 6 Million USD.

2020
NB-QXHY Invest in a new factory manufacturing for PVC ball valve, PVC butterfly valve, PVC fittings.

2012
NB-QXHY company corried out its business structural odjustment. mainly specialized in the research and development for Agricultural irrigation Field

2008
The company was established and specialized in th manutacturing for PVC valve and PVC pipe fittings and distributing other products. From 10 injection molding machines begin production.

① . 100% new material quality.
② . 100% testing before delivery, and wonderful torque.
③ . Professional service and detail control.
④ . We focus on middle and high quality market cooperation.
⑤. Innovative and development new products in building material.

CONTENTS

UPVC VALVE
QX001 - QX016

05-08 ..... PVC BALL VALVE
09-10 ..... TRUE UNION BALL VALVE
11-12 ..... PVC BUTTERFLY VALVE
13 ..... PVC VALVE AND CONNECTORS

PLASTIC PIPE FITTINGS
QX019 - QX175

15-17 ..... UPVC FITTINGS DIN STANDARD PN10 /PN16
18 ..... SCH40 UPVC FITTINGS
19 ..... UPVC BSPT THREAD FITTING
20 ..... PVC DWV FITTINGS (ASTM D2665)
21 ..... UPVC PIPE ASTM SERIES
22 ..... UPVC PIPE DIN STANDARD
23-24 ..... PP COMPRESSION FITTINGS SERIES
25-26 ..... CPVC ASTM 2846 FITTINGS
27-28 ..... PPR PIPE AND FITTINGS SERIES

SANITARY WARE SERIES
QX017 - QX018

PTFE TAPE AND PVC FAUCET 14

IRRIGATION PRODUCTS
QX176 - QX229

SPRINKLER SERIES 29-30
IRRIGATION ACCESSORIES 31
PVC LAYFLAT HOSE AND CONNECTORS 32-33
SEED TRAY 34

1. UPVC VALVE

QX001

TYPE A COMPACT BALL VALVE

HANDLE TYPE

NB-QXHY

PN16 PVC BALL VALVE

SPECIFICATION	Weight/g
1/2”	87
3/4”	129
1”	188.5
1–1/4”	272
1–1/2”	386
2”	659

PN10 PVC BALL VALVE

SPECIFICATION	Weight/g
2–1/2”	1083
3”	2007
4”	3200

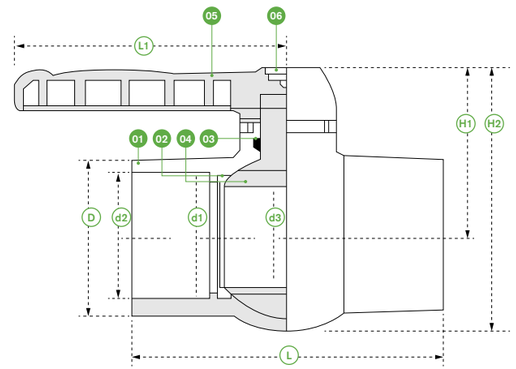

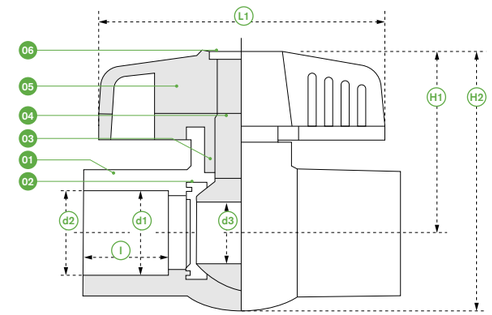

NO.	PART	Material	QTY
01	BODY	U-PVC	1
02	SEAT SEAL	EPDM	2
03	STEM O-RING	EPDM	1
04	BALL	PP	1
05	HANDLE	PVC alloy handle	1
06	CAP	PVC	1

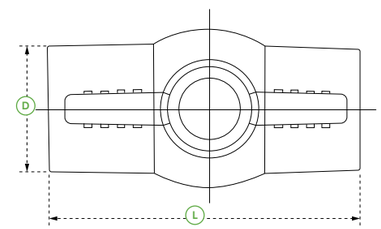

Extended body ball valve parameters — Unit: mm

DN		15	20	25	32	40	50	65	80	100
SIZE		1/2”	3/4”	1”	1–1/4”	1–1/2”	2”	2–1/2”	3”	4”
WEIGHT(g)		87	129	188.5	272	386	659	1083	2007	3305
Thd./In	NPT	14	14	11.5	11.5	11.5	11.5	8	8	8
	BSPT	14	14	11	11	11	11	11	11	11
ANSI	d1	21.23	26.57	33.27	42.04	48.11	60.17	72.85	88.7	114.07
	d2	21.54	26.87	33.65	42.42	48.58	60.63	73.38	89.31	114.76
d3		15	20	25	31	36	45	60	73	83
D		30.21	37.64	44.67	51.56	62.37	75.93	90.3	108	134.5
L		82.3	95.6	105.8	119	127.8	149.6	177	243.4	286
L1		69.8	76.4	90	102	110	131	160	176	179
l		24.3	29.4	30.5	33.6	33.6	38.3	43.2	69	79.2

QX002 | TYPE B COMPACT BALL VALVE

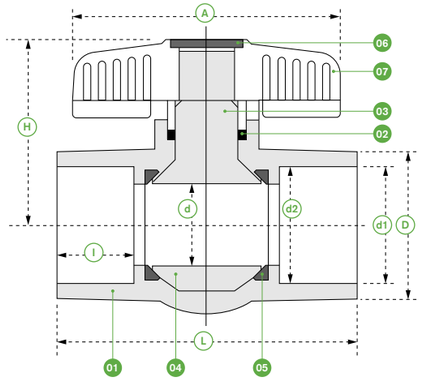

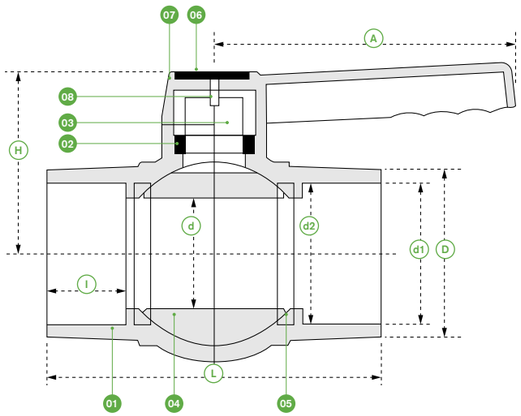

NO.	PART	Material	QTY
01	BODY	UPVC,CPVC	1
02	STEM O-RING	EPDM,FPM (NBR)	1
03	STEM	UPVC, CPVC	1
04	BALL	UPVC,CPVC	1
05	SEAT SEAL	TPE,TPV,TPO	2
06	CAP	PVC,ABS	1
07	HANDLE	PVC,ABS	1
08	SCREW	SS304,STEEL	1

Model											
	DN		15	20	25	32	40	50	65	80	100
	SIZE		1/2”	3/4”	1”	1-1/4”	1-1/2”	2”	2-1/2”	3”	4”
QX02		WEIGHT(g)	61	88	140	248	315	525	982	1460	2720
	thd./in	NPT	14	14	11.5	11.5	11.5	11.5	8	8	8
		BSPT	14	14	11	11	11	11	11	11	11
	JIS	l	20	23	25	27	31	34	45	50	55
		d1	22.3	26.3	32.33	38.43	48.46	60.56	76.6	89.6	114.7
		d2	21.7	25.7	31.67	37.57	47.54	59.44	75.87	88.83	113.98
	ANSI	l	20	23	25	27	31	34	45	50	55
		d1	21.54	26.87	33.65	42.42	48.56	60.63	73.38	89.31	114.76
		d2	21.23	26.57	33.27	42.04	48.11	60.17	72.85	88.7	114.07
	DIN	l	20	23	25	27	31	34	45	50	55
		d1	20.3	25.3	32.3	40.3	50.3	63.3	75.3	90.3	110.4
		d2	20	25	32	40	50	63	75	90	110
d			15	19	24	30	34	45	55	70	85
H			37	55	66	73	81	91	99	121	134
A			68	80	94	100	110	136	170	210	236
L			77	91	103	111	123	146	178	210	255
D			30	35.5	43	52	62	75	91	106	130

·QUALITY PRODUCTS ·QUALITY WATER ·QUALITY LIFE

QX003 | OCTAGONAL BALL VALVE

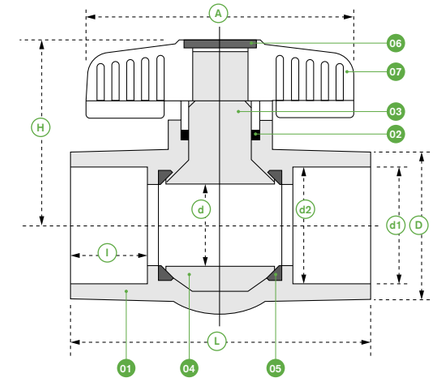

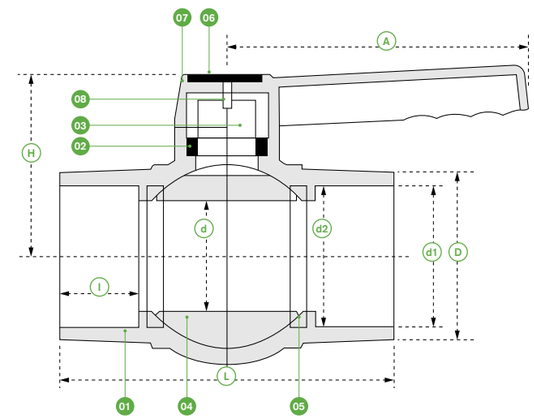

NO.	PART	Material	QTY
01	BODY	UPVC,CPVC	1
02	STEM O-RING	EPDM,FPM (NBR)	1
03	STEM	UPVC, CPVC	1
04	BALL	UPVC,CPVC	1
05	SEAT SEAL	TPE,TPV,TPO	2
06	CAP	PVC,ABS	1
07	HANDLE	PVC,ABS	1
08	SCREW	SS304,STEEL	1

Model											
	DN		15	20	25	32	40	50	65	80	100
	SIZE		1/2”	3/4”	1”	1-1/4”	1-1/2”	2”	2-1/2”	3”	4”
QX03	thd./in	NPT	14	14	11.5	11.5	11.5	11.5	8	8	8
		BSPT	14	14	11	11	11	11	11	11	11
	JIS	l	20	23	25	27	31	34	45	50	55
		d1	22.3	26.3	32.33	38.43	48.46	60.56	76.6	89.6	114.7
		d2	21.7	25.7	31.67	37.57	47.54	59.44	75.87	88.83	113.98
	ANSI	l	20	23	25	27	31	34	45	50	55
		d1	21.54	26.87	33.65	42.42	48.56	60.63	73.38	89.31	114.76
		d2	21.23	26.57	33.27	42.04	48.11	60.17	72.85	88.7	114.07
	DIN	l	20	23	25	27	31	34	45	50	55
		d1	20.3	25.3	32.3	40.3	50.3	63.3	75.3	90.3	110.4
		d2	20	25	32	40	50	63	75	90	110
d			15	19	24	30	34	45	55	70	85
H			37	55	66	73	81	91	99	121	134
A			68	80	94	100	110	136	170	210	236
L			77	91	103	111	123	146	178	210	255
D			30	35.5	43	52	62	75	91	106	130

·QUALITY PRODUCTS ·QUALITY WATER ·QUALITY LIFE

QX004

PLASTIC SINGLE UNION BALL VALVE

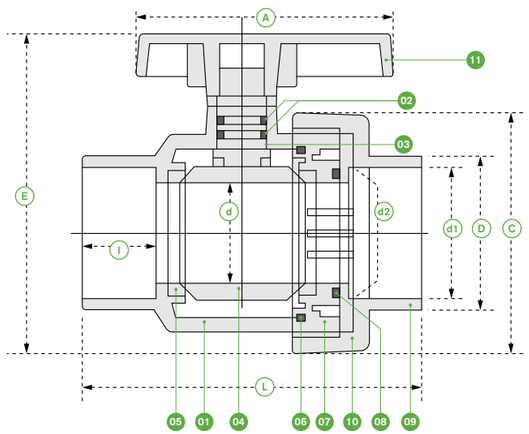

NO.	PART	Material	QTY
01	BODY	UPVC,CPVC	1
02	STEM O-RING	EPDM,FPM (NBR)	2
03	STEM	UPVC, CPVC	1
04	BALL	UPVC,CPVC	1
05	SEAT SEAL	TPE,TPV,TPO	2
06	CARRIER O-RING	EPDM,FPM (NBR)	1
07	SEAL CARRIER	UPVC CPVC	1
08	UNION O-RING	EPDM,FPM (NBR)	1
09	END CONNECTOR	UPVC,CPVC	1
10	UNION NUT	UPVC,CPVC	1
11	HANDLE	PVC	1

QX005

PVC DOUBLE UNION BALL VALVE

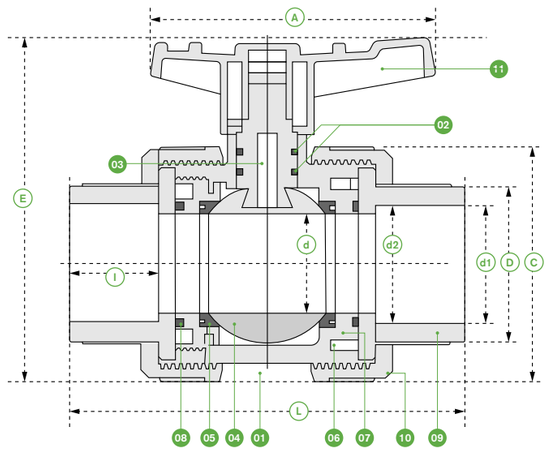

NO.	PART	Material	QTY
01	BODY	UPVC,CPVC	1
02	STEM O-RING	EPDM,FPM (NBR)	2
03	STEM	UPVC, CPVC	1
04	BALL	UPVC,CPVC	1
05	SEAT SEAL	TPE,TPV,TPO	2
06	CARRIER O-RING	EPDM,FPM (NBR)	1
07	SEAL CARRIER	UPVC CPVC	1
08	UNION O-RING	EPDM,FPM (NBR)	2
09	END CONNECTOR	UPVC,CPVC	2
10	UNION NUT	UPVC,CPVC	2
11	HANDLE	PVC	1

INSTALLATION DIAGRAM

DIMENSION Unit: mm

Model											
	DN		15	20	25	32	40	50	65	80	100
	SIZE		1/2”	3/4”	1”	1-1/4”	1-1/2”	2”	2-1/2”	3”	4”
	thd./in	NPT	14	14	11.5	11.5	11.5	11.5	8	8	8
		BSPT	14	14	11	11	11	11	11	11	11
	JIS	l	16.1	18.5	21	26.5	31.3	38	41	51.5	61
		d1	22.3	26.3	32.33	38.43	48.46	60.56	76.6	89.6	114.7
		d2	21.7	25.7	31.67	37.57	47.54	59.44	75.87	88.83	113.98
	ANSI	l	16.1	18.5	21	26.5	31.3	38	41	51.5	61
		d1	21.54	26.87	33.65	42.42	48.56	60.63	73.38	89.31	114.76
		d2	21.23	26.57	33.27	42.04	48.11	60.17	72.85	88.7	114.07
	DIN	l	16.1	18.5	21	26.5	31.3	38	41	51.5	61
		d1	20.3	25.3	32.3	40.3	50.3	63.3	75.3	90.3	110.4
		d2	20	25	32	40	50	63	75	90	110
d			15	20	25	30	38	48	59	72	96
C			56	60	69	80	95	116	139	170	210
E			79	90	103	122	139	166	190	235	277
A			67	78	87	102	120	146	178	210	250
L			83	94	107	122	146	171	210	246	283
D			28.8	35	43	52	62	75.5	88.5	106	131

QX006 | BUTTERFLY VALVE

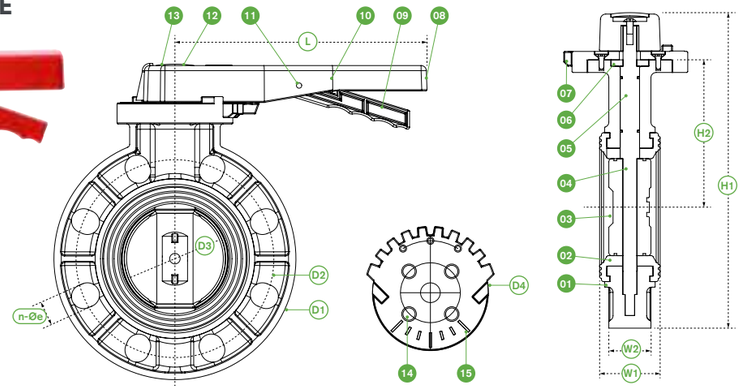

NO.	PART	Material	QTY
01	Body	PVC	1
02	Seat Seal	EPDM, FPM(NBR)	1
03	Gate	PVC	1
04	Stem	STEEL, SS304, SS316	1
05	O-Ring	EPDM, FPM(NBR)	1
06	Washer	ABS	1
07	Locking Plate	PVC	1
08	Large Handle	ABS	1

NO.	PART	Material	QTY
09	SMALL HANDLE	ABS	1
10	SPRING	SS304, 316	1
11	PIN	SS304, 316	1
12	BOLT	SS304, 316	1
13	HANDLE CAP	ABS	1
14	INSERED BOLT	SS304, 316	4
15	BOLT CAP	PVC	4

SIZE	/	2”	21/2”	3”	4”	5”	6”	8”
	DN	50	65	80	100	125	150	200
ØD		160	180	196	228	258	287	344
P.C.D. ØD1	DIN	125	145	160	180	210	240	295
	ANSI	121	140	152	191	216	241	298
	JIS	120	140	150	175	210	240	290
Ød		48	63	78	98	122	146	199
L		43	46	49	54	64	70	88
Ø1		124	124	124	124	170	170	170
Ø2		1SO5211 F05/F07	1SO5211 F05/F07	1SO5211 F05/F07	1SO5211 F05/F07	1SO5211 F07/F10	1SO5211 F07/F10	1SO5211 F10
LI		190	190	240	240	310	310	310
W		55	55	55	55	72	72	72
H1		100	112	120	140	168	181	215
H2		143	155	172	194	223	239	280
H		223	245	270	308	352	382	452
n-Øe	DIN	4-Ø19	4-Ø19	8-Ø19	8-Ø19	8-Ø19	8-Ø23	8-Ø23
	ANSI	4-Ø19	4-Ø19	4-Ø19	8-Ø19	8-Ø19	8-Ø23	8-Ø23
	JIS	4-Ø18	4-Ø19	8-Ø19	8-Ø19	8-Ø19	8-Ø23	12-Ø23
PN	PSI	150	150	150	150	150	150	100
	MPa	1	1	1	1	1	1	0.6

QX007 | BUTTERFLY VALVE WITH GEARTYPE

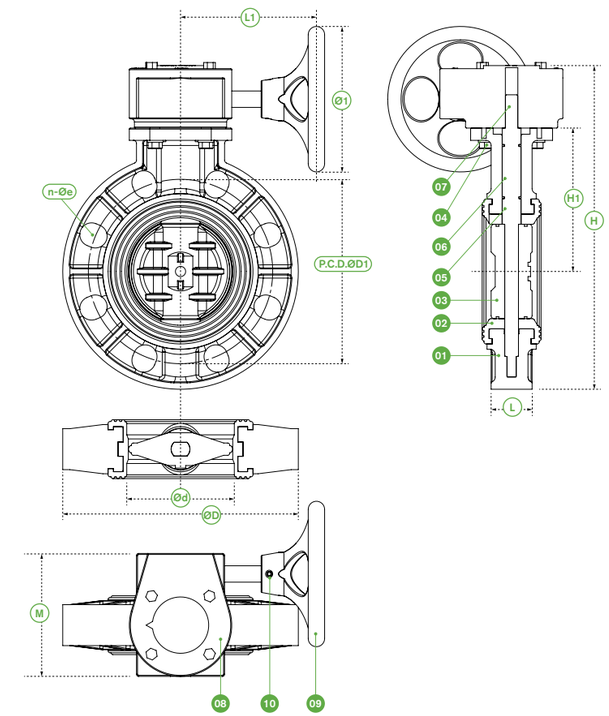

NO.	PART	Material	QTY
01	Body	PVC/CPVC/PPG	1
02	Seat Seal	EPDM、FPM	1
03	DISC	PVC/CPVC/PPG	1
04	Bolt	SUS304	1
05	Stem	SteelsUS304/SUS316	1
06	O-Ring	EPDM、FPM	1
07	Key	Steel	1
08	Gear Box	Iron	1
09	Hand Wheel	Iron	1
10	Pin	Steel	1

DIMENSION

Unit: mm

SIZE	/	4”	5”	6”	8”	10”	12”	14”	16”	80
	DN	100	125	150	200	250	300	350	400	500
ØD		228	258	287	344	412	460	500	565	670
P.C.D. ØD1	DIN	180	210	240	295	350	400	460	515	620
	ANSI	191	216	241	298	362	432	476	540	
	JIS	175	210	240	290	355	400	445	510	
Ød		98	122	146	179	255	302	345	395	490
L		54	64	70	88	98	108	88	98	135
Ø1		145	280	280	280	280	280	380	380	280
L1		120	200	200	200	220	220	280	280	
H1		140	168	181	215	260	280	410	490	520
H		340	385	417	487	551	595	670	770	865
M		120	180	180	180	180	180	250	250	
N		90	100	100	100	130	130	220	220	
n-Øe	DIN	8-Ø19	8-Ø19	8-Ø23	8-Ø23	12-Ø25	12-Ø25	16-Ø25	16-Ø27	20-Ø32
	ANSI	8-Ø19	8-Ø19	8-Ø23	8-Ø23	12-Ø25	12-Ø25	12-Ø29	16-Ø29	
	JIS	8-Ø19	8-Ø19	8-Ø23	12-Ø23	12-Ø25	16-Ø25	16-Ø25	16-Ø25	16-Ø27
PN	PSI	150	150	150	150	100	100	60	60	60
	Mpa	1	1	1	1	0.6	0.6	0.4	0.4	0.4

QX008

PVC TWO PCS BALL VALVE

SPECIFICATION	
Size:	1/2” to 4”(15mm to 100mm)
With socket and threaded end	

QX009

EVACUATION VALVE

SPECIFICATION	
Size:	3/4” 1” 2”

QX010

PVC FLANGE

SPECIFICATION	
Size:	1/2” to 4”(15mm to 100mm)
With socket end	

QX011

PVC UNION

SPECIFICATION	
Size:	1/2” to 4”
Supply white, grey	
Specification:	SCH40, SCH80, DIN

QX012

PVC FOOT VALVE

SPECIFICATION	
Size:	1/2” to 8”(15mm to 200mm)
With socket and threaded end	

QX013

PVC WAFER CHECK VALVE

SPECIFICATION	
Material	U-PVC
Color	Grey White
Standard	DIN JIS BS ANSI
SIZE	2” TO 8”

QX014

PVC COMPRESSION

SPECIFICATION	
Size:	1/2” to 4” (15mm to 100mm)
Specification:	SCH40, DIN Standard

QX015

PVC CHECK VALVE

SPECIFICATION	
Material	PVC/UPVC
Standard	DIN, ANSI, NPT, BSPT, BS
Size	DN65~DN150(2 1/2”~6”
connection	Sockets; cement; glue

QX016

PVC MALE UNION

SPECIFICATION	
Size:	1/2” to 4”
Standard:	DIN, BS
With socket and thread end	

QX017

PTFE THREADED SEAL TAPE

Name	100% ptfe water pipe thread seal tape
Color	white yellow or other color
Width:	3 – 100mm(1/2’, 3/4’, 1’)
Thickness:	0.075mm, 0.1MM , 0.2MM
Length:	5~100m
Density:	0.2 – 1.2g/cm3
Material:	PTFE
Used temperature:	-190˚C to +370˚C
Sample:	available
Packing Details	10pcs/ Roll, 250pcs inner box, 1000 pcs per box or 250 pcs per box
According to customer’s requests	

QX018

PLASTIC FAUCET

Material:	ABS PP PVC
Size:	1/2’, 3/4’
Usage:	Kitchen, outdoors, sanitary
Use:	basin, Washing machine
Installation Type:	Wall Mounted
Packaging	240PCS/BOX
ABS PP PVC Plastic Coloured Water Tap	

2. UPVC FITTINGS DIN STANDARD PN10 /PN16

QX019
Coupling

SPECIFICATION	
Φ20	Φ110
Φ25	Φ125
Φ32	Φ140
Φ40	Φ160
Φ50	Φ200
Φ63	Φ250
Φ75	Φ315
Φ90	Φ400

QX020
Male Coupling

SPECIFICATION	
Φ20	Φ63
Φ25	Φ75
Φ32	ϕ90
Φ40	Φ110
Φ50	

QX021
Female Coupling

SPECIFICATION	
Φ20	Φ63
Φ25	Φ75
Φ32	ϕ90
Φ40	Φ110
Φ50	

QX022
End Cap

SPECIFICATION	
Φ20	Φ110
Φ25	Φ125
Φ32	Φ160
Φ40	Φ200
Φ50	Φ250
Φ63	Φ315
Φ75	Φ400
Φ90	

QX023
Ts Flange

SPECIFICATION	
Φ20	Φ75
Φ25	Φ90
Φ32	Φ110
Φ40	Φ125
Φ50	Φ160
Φ63	Φ200

QX024
PVC union check valve2

SPECIFICATION	
Φ20	Φ63
Φ25	Φ75
Φ32	Φ90
Φ40	Φ110
Φ50	

QX027
PVC union check valve

SPECIFICATION	
Φ20	Φ63
Φ25	Φ75
Φ32	Φ90
Φ40	Φ110
Φ50	

QX025
90° Deg Elbow

SPECIFICATION	
Φ20	Φ110
Φ25	Φ125
Φ32	Φ140
Φ40	Φ160
Φ50	Φ200
Φ63	Φ250
Φ75	Φ315
Φ90	Φ400

QX028
45° Deg Elbow

SPECIFICATION	
Φ20	Φ110
Φ25	Φ125
Φ32	Φ140
Φ40	Φ160
Φ50	Φ200
Φ63	Φ250
Φ75	Φ315
Φ90	Φ400

QX026
Reducing Coupling

SPECIFICATION		
ϕ25*20	ϕ75*50	Φ160×110
ϕ32*20	ϕ75*63	Φ160×125
ϕ32*25	ϕ90*40	Φ200×110
ϕ40*20	ϕ90*50	Φ200×160
ϕ40*25	ϕ90*63	Φ250×110
ϕ40*32	ϕ90*75	Φ250×160
ϕ50*20	Φ110×50	Φ250×200
ϕ50*25	Φ110×63	Φ315×110
ϕ50*32	Φ110×75	Φ315×160
ϕ50*40	Φ110×90	Φ315×200
ϕ63*25	Φ125×63	Φ315×250
ϕ63*32	Φ125×75	Φ400×200
ϕ63*40	Φ125×90	Φ400×250
ϕ63*50	Φ125×110	Φ400×315
ϕ75*32	Φ140×110	Φ400×355
ϕ75*40	Φ160×90	Φ400×315

QX029
Reducing Tee

SPECIFICATION		
ϕ25*20	ϕ75*40	Φ160×90
ϕ32*20	ϕ75*50	Φ160×110
ϕ32*25	ϕ75*63	Φ200×75
ϕ40*20	ϕ90*40	Φ200×90
ϕ40*25	ϕ90*50	Φ200×110
ϕ40*32	ϕ90*63	Φ200×160
ϕ50*20	ϕ90*75	Φ250×110
ϕ50*25	Φ110×50	Φ250×160
ϕ50*32	Φ110×63	Φ250×200
ϕ50*40	Φ110×75	Φ315×110
ϕ63*20	Φ110×90	Φ315×160
ϕ63*25	Φ125×63	Φ315×200
ϕ63*32	Φ125×75	Φ315×250
ϕ63*40	Φ125×90	Φ400×200
ϕ63*50	Φ125×110	Φ400×250
ϕ75*32	Φ140×110	Φ400×315

QX030
Tee

SPECIFICATION	
Φ20	Φ110
Φ25	Φ125
Φ32	Φ140
Φ40	Φ160
Φ50	Φ200
Φ63	Φ250
Φ75	Φ315
Φ90	Φ400

QX031
Van Stone Flange

SPECIFICATION	
Φ50	Φ250
Φ63	Φ315
Φ75	Φ355
Φ90	Φ400
Φ110	De450
Φ160	De500
Φ200	

QX032
One-Piece Flange

SPECIFICATION	
De20	De110
De25	De140
De32	De160
De40	De180
De50	De200
De63	De250
De75	De280
De90	

QX033
Clamp Saddle

SPECIFICATION		
De90*1.5″	De160*0.75″	De225*2.5″
De110*0.5″	De160*1″	De250*2″
De110*0.75″	De160*1.5″	De250*2.5″
De110*1″	De160*2″	De250*3″
De110*1.5″	De160*2.5″	De315*2″
De110*2″	De200*1.5″	De315*3″
De110*2.5″	De200*2″	De315*4″
De125*1.5″	De200*2.5″	De315*110
De125*2″	De225*0.5″	De315*160
De125*2.5″	De225*1.5″	De400*200
De160*0.5″	De225*2″	

QX034
PVC foot valve with union

SPECIFICATION	
Φ20	Φ63
Φ25	Φ75
Φ32	Φ90
Φ40	Φ110
Φ50	

QX035
Elbow 90°(F/F)

SPECIFICATION	
De63	De200
De75	De225
De90	De250
De110	De315
De160	De355

QX036
Faucet Flange

SPECIFICATION	
De63	De200
De75	De225
De90	De250
De110	De315
De125	De355
De140	De400
De160	

QX037
Spigot Flange

SPECIFICATION	
De63	De200
De75	De225
De90	De250
De110	De315
De160	De400

QX038
Reducer(F/F)

SPECIFICATION		
De75*63	De200*160	De315*110
De90*63	De225*110	De315*160
De90*75	De225*160	De315*200
De110*63	De225*200	De315*225
De110*75	De250*110	De315*250
De110*90	De250*160	De355*200
De160*110	De250*200	De355*315
De200*110	De250*225	

QX039
Threaded Elbow 90°

SPECIFICATION
20*0.5”
25*0.75”

QX040
Elbow 22.5° (F/S)

SPECIFICATION
De225
De250
De315

QX041
Elbow 22.5°(F/F)

SPECIFICATION	
De63	De200
De75	De225
De90	De250
De110	De315
De160	

QX042
Elbow 45°(F/F)

SPECIFICATION	
De63	De200
De75	De225
De90	De250
De110	De315
De160	De355

QX043
Elbow 45° (F/S)

SPECIFICATION
De200
De225
De250
De315

QX044
Elbow 90° (F/S)

SPECIFICATION
De200
De225
De250
De315

·QUALITY PRODUCTS ·QUALITY WATER ·QUALITY LIFE

QX045
Elbow 90°(F/F)

SPECIFICATION	
De63	De200
De75	De225
De90	De250
De110	De315
De160	De355

QX046
Tee (F/F/S)

SPECIFICATION
De110
De160*110
De160
De200*110
De200*160
De200
De225*110
De225*160
De225
De250*110
De250*160
De250*200
De250
De315*110
De315*160
De315*200
De315

QX047
Tee (F/F/F)

SPECIFICATION		
De63	De110*75	De250*160
De75	De110*90	De250*200
De90	De160*63	De250*225
De110	De160*75	De315*110
De160	De160*90	De315*160
De200	De160*110	De315*200
De225	De200*63	De315*225
De250	De200*75	De315*250
De315	De200*90	De355*160
De355	De200*110	De355*200
De75*63	De200*160	De355*225
De90*63	De225*110	De355*250
De90*75	De225*160	De355*315
De110*63	De250*110	

QX048
Reducing Bushing

SPECIFICATION
ϕ25*20
ϕ32*25
ϕ40*32
ϕ50*40
ϕ63*50
ϕ75*63
ϕ90*75
ϕ110*90
ϕ140*110
ϕ160*110
ϕ160*140
ϕ225*160
ϕ280*250
ϕ315*280
ϕ355*315
ϕ400*315
ϕ400*355

QX049
Tee With Flanged Branch(F/F)

SPECIFICATION
De110
De160*110
De160
De200*110
De200*160
De200
De225*110
De225*160
De225
De250*110
De250*160
De250*200
De250
De315*110
De315*160
De315*200
De315

QX050
Y–Tee

SPECIFICATION	
De110	De250
De160	De315
De200	

QX051
Lateral Cross(F/F/S/S)

SPECIFICATION	
De110	De250
De160	De315
De200	

QX052
PVC Cross 2 PN16

SPECIFICATION	
ϕ20	ϕ90
ϕ25	ϕ110
ϕ32	ϕ140
ϕ40	ϕ160
ϕ50	ϕ200
ϕ63	ϕ250
ϕ75	ϕ315

QX053
Flange foot valve

SPECIFICATION	
Φ20	Φ63
Φ25	Φ75
Φ32	Φ90
Φ40	Φ110
Φ50	

QX054
PVC double union valve

SPECIFICATION	
Φ20	Φ63
Φ25	Φ75
Φ32	Φ90
Φ40	Φ110
Φ50	

QX055
PVC Cross PN16

SPECIFICATION	
ϕ20	ϕ110
ϕ25	ϕ140
ϕ32	ϕ160
ϕ40	ϕ200
ϕ50	ϕ225
ϕ63	ϕ250
ϕ75	ϕ315
ϕ90	

QX056
Y–filter

SPECIFICATION	
Φ20	Φ63
Φ25	Φ75
Φ32	Φ90
Φ40	Φ110
Φ50	

QX057
PVC reducer Cross PN16

SPECIFICATION
ϕ90*50
ϕ90*63
ϕ110*50
ϕ110*63
ϕ140*50
ϕ140*63
ϕ140*75
ϕ160*63
ϕ160*110

2. SCH40 UPVC FITTINGS

QX058
Coupling

SPECIFICATION	
½	2
¾	2½
1	3
1¼	4
1½	

QX059
End Cap

SPECIFICATION	
½	2
¾	2½
1	3
1¼	4
1½	

QX060
Female End Cap

SPECIFICATION
½
¾
1
1¼
1½
2

QX061
Female Adaptor

SPECIFICATION	
½	2
¾	2½
1	3
1¼	4
1½	

QX062
Union

SPECIFICATION	
½	2
¾	2½
1	3
1¼	4
1½	

QX063
Reducing Bushing

SPECIFICATION
½
¾
1
1¼
1½
2

QX064
Male Plug

SPECIFICATION
¾×½
1×¾
1¼ ×1
1½×1¼
2×1½

QX065
Male Adaptor

SPECIFICATION	
½	2
¾	2½
1	3
1¼	4
1½	

QX066
Reducing Coupling

SPECIFICATION	
¾×½	2×1½
1×½	2½×1½
1×¾	2½×2
1¼ ×¾	3×2
1¼ ×1	3×2½
1½×1	4×2½
1½×1¼	4×3
2×1¼	

QX067
90° Female Elbow

SPECIFICATION	
½	2
¾	2½
1	3
1¼	4
1½	

QX068
90° Elbow

SPECIFICATION	
½	1¼
¾	1½
1	2

QX069
90° Female Reducing Elbow

SPECIFICATION
½×¾
1×½
1×¾

QX070
45° Elbow

SPECIFICATION	
½	2
¾	2½
1	3
1¼	4
1½	

QX071
Tee

SPECIFICATION	
½	2
¾	2½
1	3
1¼	4
1½	

QX072
Reducing Tee

SPECIFICATION	
¾×½	2×1½
1×½	2½×1½
1×¾	2½×2
1¼ ×¾	3×2
1¼ ×1	3×2½
1½×1	4×2½
1½×1¼	4×3
2×1¼	

QX073
Female Tee

SPECIFICATION
½ ×½
¾×¾
1×1

·QUALITY PRODUCTS ·QUALITY WATER ·QUALITY LIFE

2. UPVC BSPT THREAD FITTING

QX074
Female Coupling

SPECIFICATION	
1/2”	2”
3/4”	2-1/2”
1”	3”
1-1/4”	4’’
1-1/2”	

QX075
Female Reducer

SPECIFICATION
3/4”×1/2”
1”×1/2”
1”×3/4”

QX076
Male Coupling

SPECIFICATION	
1/2”	1-1/4”
3/4”	1-1/2”
1”	2”

QX077
Male Plug

SPECIFICATION	
1/2”	1-1/4”
3/4”	1-1/2”
1”	2”

QX078
Female And Male Adapter

SPECIFICATION
3/4”x1/2”
1”x1/2”
1”x3/4”
1-1/4x3/4”
1-1/4”x1”
1-1/2”x3/4”
1-1/2”x1”
1-1/2”x1-1/4”
2x1”
2x1-1/4”
2”x1-1/2”

QX079
Female Cap

SPECIFICATION	
1/2”	1-1/4”
3/4”	1-1/2”
1”	2”

QX080
Male Reducing Coupling

SPECIFICATION
3/4”×1/2”
1”×1/2”
1”×3/4”

QX081
Female And Male Union

SPECIFICATION
1/2”
3/4”
1”

QX082
Female And Male Tank Back Nut

SPECIFICATION
1/2”
3/4”
1”

QX083
Female Union

SPECIFICATION	
1/2”	1-1/4”
3/4”	1-1/2”
1”	2”

QX084
Clip

SPECIFICATION
1/2”
3/4”

QX085
Female Tee

SPECIFICATION	
1/2”	2”
3/4”	2-1/2”
1”	3”
1-1/4”	4’’
1-1/2”	

QX086
Female Reducer Tee

SPECIFICATION
3/4”×1/2”
1”×1/2”
1”×3/4”

QX087
Female Elbow

SPECIFICATION	
1/2”	2”
3/4”	2-1/2”
1”	3”
1-1/4”	4’’
1-1/2”	

QX088
Reduced Elbow

SPECIFICATION
3/4”×1/2”

QX089
Elbow With Brass

SPECIFICATION
1/2”
3/4”
1/2”x3/4”

QX090
Male & Female Elbow

SPECIFICATION	
1/2”	1-1/4”
3/4”	1-1/2”
1”	2”

2. PVC DWV FITTINGS (ASTM D2665)

QX091 | Dwv Coupler

SPECIFICATION
1-1/2”
2”
3”
4”
6”

QX092 | Dwv Male Adapter

SPECIFICATION
2”

QX093 | Dwv End Cap

SPECIFICATION
2”
3”
4”

QX094 | Dwv Reduing Bushing

SPECIFICATION
2”x1-1/2”
4”x2”

QX095 | Dwv Plug

SPECIFICATION	
1-1/4”	3”
1-1/2”	4”
2”	6”

QX096 | Dwv Vent Cap

SPECIFICATION
2”
3”
4”

QX097 | Trap Adaptor

SPECIFICATION
1-1/2”

QX098 | Dwv Tripple

SPECIFICATION
4”

QX099 | Dwv Elbow90°

SPECIFICATION
3”
4”

QX100 | Dwv Elbow45°

SPECIFICATION
1-1/2”
2”
3”
4”
6”

QX101 | Dwv Tee

SPECIFICATION
3”
4”

QX102 | Dwv Tee

SPECIFICATION
1-1/2”
2”
3”
4”
6”

QX103 | Dwv Bend

SPECIFICATION
1-1/2”
2”
3”
4”
6”

QX104 | Dwv Elbow M*F

SPECIFICATION
11/2“
2”

QX105 | Dwv Y- Tee

SPECIFICATION
1-1/2”
2”
3”
4”
6”

QX106 | P-Trap With Female Clean Out

SPECIFICATION
11/2“
2”

QX107 | Dwv U-Elbow

SPECIFICATION
11/2“
2”

QX108 | S-Trap With Male Clean Out

SPECIFICATION
11/2“
2”

QX109 | S-Trap Without Clean Out

SPECIFICATION
11/2“
2”

QX110 | Dwv Trap With Union

SPECIFICATION
1-1/2”

QX111 | Tail Piece

SPECIFICATION
1-1/2”

QX112 | Pvc Pressure Pipe

SPECIFICATION	
1/2”	2”
3/4”	3”
1”	4”
1-1/4”	6’’
1-1/2”	8’’

2. CPVC PIPE ASTM2846 STANDARD SDR11

Size	Weight/M	Size	Weight/M
½”	0.120	½”	0.106
¾”	0.210	¾”	0.172
1”	0.343	1”	0.268
1¼ ”	0.520	1¼”	0.426
1½”	0.720	1½”	0.594
2”	1.222	2”	1.094

QX113

2. UPVC PIPE ASTM SERIES

ASTM D2241								
Nominal Size (inch)	Average Outer diameter (mm)	Wall Thicknesses (Minimum)						
		SDR64	SDR41	SDR32.5	SDR26	SDR21	SDR17	SDR13.5
1/2”	21.34							1.57
3/4”	26.67					1.52	1.57	1.98
1”	33.40				1.52	1.60	1.96	2.46
1–1/4”	42.16			1.52	1.63	2.01	2.49	3.12
1–1/2”	48.26			1.52	1.85	2.29	2.84	3.58
2”	60.32			1.85	2.31	2.87	3.56	4.47
2–1/2”	73.02			2.24	2.79	3.48	4.29	5.41
3”	88.90		2.16	2.74	3.34	4.24	5.23	6.58
4”	114.30	1.78	2.79	3.51	4.39	5.44	6.73	8.46
5”	141.30	2.21	3.45	4.34	5.44	6.73	8.31	10.46
6”	168.28	2.64	4.11	5.18	6.48	8.03	9.91	12.47
8”	219.08	3.43	5.33	6.73	8.43	10.41	12.90	
10”	273.05	4.27	6.65	8.41	10.49	12.98	16.05	
12”	323.85	5.05	7.90	9.96	12.45	15.39	19.05	
14”	355.60		8.66	10.92	13.67	16.92	20.90	
16”	406.40		9.91	12.50	15.62	19.35	23.90	

QX114

2. UPVC PIPE DIN STANDARD

QX115

PVC–U Pipe DIN STANDARD							
Nominal Size (mm)	Weight/M (kg)						
	PN6.3	PN8	PN10	PN12.5	PN16	PN20	PN25
20					0.156	0.172	0.194
25				0.199	0.220	0.249	0.297
32			0.259	0.286	0.339	0.403	0.488
40			0.363	0.431	0.530	0.641	0.762
50		0.458	0.545	0.673	0.818	0.997	1.187
63	0.638	0.722	0.859	1.074	1.308	1.583	1.583
75	0.865	0.998	1.227	1.514	1.855	2.243	2.670
90	1.165	1.445	1.642	2.180	2.664	3.201	3.852
110	1.383	1.730	2.121	2.648	3.257	3.939	4.773
125	1.804	2.254	2.754	3.408	4.153		
140	2.280	2.785	3.469	4.263	5.217	6.376	7.716
160	2.978	3.627	4.551	5.597	6.824	8.346	10.132
200	4.563	5.735	7.067	8.724	10.683	13.001	15.792
225	5.762	7.183	8.882	11.041	13.533		
250	7.214	8.905	11.015	13.523	16.614	20.339	
315	11.293	14.134	17.493	21.478	26.445	32.311	
350	14.172	17.641	21.836	26.868	33.122	40.348	
400	18.251	22.760	28.092	34.723	42.565	52.003	
450	23.048	28.730	35.529	43.971	53.943		
500	28.631	35.395	43.839	54.309	66.666		
560	35.721	44.810	55.011	66.266			
630	45.174	56.255	69.693	85.910			

2. PP COMPRESSION FITTINGS SERIES

QX116
End Cap

SPECIFICATION	
20	63
25	75
32	90
40	110
50	

QX117
Reducing Coupling

SPECIFICATION	
25X20	63X32
32X20	63X40
32X25	63X50
40X20	75X50
40X25	75X63
40X32	90X63
50X25	90X75
50X32	110X90
50X40	

QX118
Female Tee

SPECIFICATION
20x½”
25x½”
25x¾”
32x½”
32x¾”
32x1”
40x1¼”
50x1¼”
50x1½”
63x1½”
63x2”
75x2½”
90x3”
110x4”

QX119
Female Elbow

SPECIFICATION
20x1/2”
20x3/4”
25x1/2”
25x3/4”
25x1”
32x3/4”
32x1”
32x1–1/4”
40x1”
40x1¼”
40x1–1/2”
50x1–1/4”
50x1–1/2”
50x2”
63x1½”
63x2”
75x2”
75x2½”
90x2–1/2”
90x3”
110x3”
110x4”

QX120
PP double union valve

SPECIFICATION
20 × 20
25 × 25
32 × 32
40 × 40
50 × 50
63 × 63
75*75
90*90
110*110

QX121
Coupling

SPECIFICATION	
20	63
25	75
32	90
40	110
50	

QX121-1
END CAP

SPECIFICATION
20 x 1/2”
25 x 1/2”
25 x 3/4”
32 x 3/4”
32 x 1”
40*1–1/4”
50*11/2”
63*2”
75*2–1/2”
90*3
110*4

QX122
Male Adaptor

SPECIFICATION		
20 x 1/2”	40*1”	75*2”
20 x 3/4”	40*1–1/4”	75*2–1/2”
20x1”	40*1–1/2”	75*3”
25 x 1/2”	50*11/4”	90*2”
25 x 3/4”	50*11/2”	90*2–1/2
25 x 1”	50*2”	90*3
32 x1/2”	63*11/2”	90*4
32 x 3/4”	63*2”	110*3”
32 x 1”	63*2–1/2”	110*4”
32*1–1/4”		

QX123
Elbow 90˚

SPECIFICATION	
20	63
25	75
32	90
40	110
50	

QX124
Tee

SPECIFICATION	
20	63
25	75
32	90
40	110
50	

QX125
Male Tee

SPECIFICATION
20x½”
20x¾”
25x½”
25x¾”
25x1”
32x½”
32x¾”
32x1”
40x1”
40x1¼”
50x1¼”
50x1½”
63x1½”
63x2”
75x2”
75x2½”
90x2½”
90x3”
110x4”

QX126
Reducing Tee

SPECIFICATION
25x20x25
32x20x32
32x25x32
40x25x40
40x32x40
50x25x50
50x32x50
50x40x50
63x32x63
63x40x63
63x50x63
75x50x75
75x63x75
90x63x90
90x75x90
110x90x110

QX127
Male Elbow

SPECIFICATION
20x½”
20x¾”
25x½”
25x¾”
25x1”
32x½”
32x¾”
32x1”
40x1¼”
50x1¼”
50x1½”
63x1½”
63x2”
75x2½”
90x3”
110x4”

QX128
CLAMP SADDLE
PN16

SPECIFICATION		
25 × 1/2”	90 × 1”	180 x 1/2”
25 × 3/4”	90 × 1.1/4”	180 x 3/4”
32 × 1/2”	90 × 1.1/2”	180 × 1”
32 × 3/4”	90 × 2”	180 x 1.1/2”
32 × 1”	90 × 2.1/2”	180 × 2”
40 × 1/2”	110 × 1/2”	180 x 3”
40 × 3/4”	110 × 3/4”	200 × 3/4”
40 × 1”	110 × 1”	200 × 1”
50 × 1/2”	110 × 1.1/4”	200 × 1.1/4”
50 × 3/4”	110 × 1.1/2”	200 × 2”
50 × 1”	110 × 2”	200 × 2.1/2”
50 × 1.1/4”	110 × 2.1/2”	200 × 3”
50 × 1.1/2”	110 × 3”	200 × 4”
63 × 1/2”	125 × 3/4”	225 × 1”
63 × 3/4”	125 × 1”	225 × 1.1/4”
63 × 1”	125 × 1.1/4”	225 × 1.1/2”
63 × 1.1/4”	125 × 1.1/2”	225 × 2”
63 × 1.1/2”	125 × 2”	225 × 2.1/2”
63 × 2”	125 × 3”	225 × 3”
75 × 1/2”	160 × 1/2”	250 × 2”
75 × 3/4”	160 × 3/4”	250 × 3”
75 × 1”	160 × 1”	250 × 4”
75 × 1.1/4”	160 × 1.1/2”	315 × 2”
75 × 1.1/2”	160 × 1.1/4”	315 × 3”
75 × 2”	160 × 2”	315 × 4”
90 × 1/2”	160 × 3”	315 × 6”
90 × 3/4”	160 × 4”	

QX129
Coupling

Size (in.)	
½	1¼
¾	1½
1	2

QX133
Reducing Bushing

Size (in.)
¾×½
1×½
1×¾
1¼ ×½
1¼ ×¾
1¼ ×1
1½×½
1½×¾
1½×1
1½×1¼
2×½
2×¾
2×1
2×1¼
2×1½

QX130
End Cap

Size (in.)	
½	1¼
¾	1½
1	2

QX131
Male Adapter

Size (in.)	
½	1½
¾	2
1	¾×½
1¼	2×1½

QX134
Union

Size (in.)	
½	1¼
¾	1½
1	2

QX132
Female Adapter

Size (in.)	
½	1¼
¾	1½
1	2

QX135
Tank coupling

Size (in.)	
½	1¼
¾	1½
1	2

QX136
Reducing Coupling

Size (in.)	
¾×½	1½×1
1×½	1½×1¼
1×¾	2×1¼
1¼ ×¾	2×1½
1¼ ×1	

QX137
90° Elbow

Size (in.)	
½	1½
¾	2
1	¾×½
1¼	

QX138
45° Elbow

Size (in.)	
½	1¼
¾	1½
1	2

QX139
Clip

Size (in.)	
½	1¼
¾	1½
1	2

QX140
90° Ear Elbow

Size (in.)
½

QX141
Tee

Size (in.)	
½	1¼
¾	1½
1	2

QX142
Reducing Tee

Size (in.)
¾ ×½×½
¾ ×½×¾
¾×¾ ×½
1×1×½
1×1×¾
1¼ ×1¼×¾
1¼ ×1¼×1
1½×1½×1
1½×1½×1¼
2×2×1¼
2×2×1½

QX143
Cross Tee

Size (in.)	
½	1¼
¾	1½
1	2

QX144
Female Coupling
(Copper Thread)

Size (in.)
½
¾
1
¾×½

QX145
Male Coupling
(Copper Thread)

Size (in.)	
½	1¼
¾	1½
1	2

QX146
Female Coupling
(Copper Thread)

Size (in.)	
½	1¼
¾	1½
1	2

QX147
90° Female Elbow
(Copper Thread)

Size (in.)
½ x ½
¾×½
¾×¾
1×½

QX148
Male elbow (copper thread)

Size (in.)
½ x ½
¾×½

QX149
Male Tee
(Copper Thread)

Size (in.)
½×½
¾×½
1×½

QX150
Female Tee
(Copper Thread)

Size (in.)
½×½ ×½
¾×½ ×¾
1×1×½

2. PPR PIPE AND FITTINGS SERIES

Available colour:
Green Snow white Milk white Gray

QX151
Pp-R Pipe
(Pn=12.5 To Pn25)
Din Standard

SPECIFICATION	
20	63
25	75
32	90
40	110
50	160

QX152
Coupling

SPECIFICATION	
20	63
25	75
32	90
40	110
50	160

QX153
Plastic Union

SPECIFICATION	
20	40
25	50
32	63

QX154
Plug

SPECIFICATION
.1/2
.3/4
1''

QX155
Flange Set (Ppr)

SPECIFICATION	
40	90
50	110
63	160
75	

QX156
Long Elbow

SPECIFICATION
20
25
32
40

QX157
Short Bypass Bend

SPECIFICATION
20
25
32

QX158
steel ball valve

SPECIFICATION	
20	40
25	50
32	63

QX159
45° Elbow

SPECIFICATION	
20	63
25	75
32	90
40	110
50	160

QX160
Equal Tee

SPECIFICATION	
20	40
25	50
32	63

QX161
Reducing Elbow

SPECIFICATION
25*20
32*20
32*25
40*20
40*25
40*32
50*20
50*25
50*32
50*40
63*20
63*25
63*32
63*40
63*50

QX162
90° Elbow

SPECIFICATION	
20	63
25	75
32	90
40	110
50	160

QX163
Equal Tee

SPECIFICATION	
20	63
25	75
32	90
40	110
50	160

QX164
Reducing Tee

SPECIFICATION
25*20*25
32*20*32
32*25*32
40*20*40
40*25*40
40*32*40
50*20*50
50*25*50
50*32*50
50*40*50
63*20*63
63*25*63
63*32*63
63*40*63
63*50*63
75*20*75
75*25*75
75*32*75
75*40*75
75*50*75
75*63*75
90*20*90
90*25*90
90*32*90
90*40*90
90*50*90
90*63*90
90*75*90

QX165
Reducing Socket

SPECIFICATION		
S25*20	S63*40	S90*50
S32*20	S63*50	S90*63
S32*25	S75*20	S90*75
S40*20	S75*25	S110*20
S40*25	S75*32	S110*25
S40*32	S75*40	S110*32
S50*20	S75*50	S110*40
S50*25	S75*63	S110*50
S50*32	S90*20	S110*63
S50*40	S90*25	S110*75
S63*20	S90*32	S110*90
S63*25	S90*40	S160*110
S63*32		

QX166
Female Coupling

SPECIFICATION
S20*1/2F
S20*3/4F
S25*1/2F
S25*3/4F
S32*1/2F
S32*3/4F
S32*1 " F
S40*11/4F
S50*11/2F
S63*2F
S75*2 1/2F
S90*3F
S110*4F

QX167
Male Coupling

SPECIFICATION
S20*1/2M
S20*3/4M
S25*1/2M
S25*3/4M
S32*1/2M
S32*3/4M
S32*1M
S40*11/4M
S50*11/2M
S63*2M
S75*2 1/2M
S90*3M
S110*4M

QX168
Female Elbow

SPECIFICATION
L20*1/2F
L20*3/4F
L25*1/2F
L25*3/4F
L32*1/2F
L32*3/4F
L32*1F
L40*11/4F
L50*11/2F
L63*2F

QX169
Male Elbow

SPECIFICATION
L20*1/2M
L20*3/4M
L25*1/2M
L25*3/4M
L32*1/2M
L32*3/4M
L32*1M
L40*11/4M
L50*11/2M
L63*2M

NB-QXHY

QX170
Female Elbow With Pedestal

SPECIFICATION
20*1/2F
20*3/4F
25*1/2F
25*3/4F

QX171
Male Elbow With Pedestal

SPECIFICATION
20*1/2M
20*3/4M
25*1/2M
25*3/4M

QX172
Female Tee

SPECIFICATION
T20*1/2F
T20*3/4F
T25*1/2F
T25*3/4F
T32*1/2F
T32*3/4F
T32*1F
T40*11/4F
T50*11/2
T63*2F

QX173
Male Tee

SPECIFICATION
T20*1/2M
T20*3/4M
T25*1/2M
T25*3/4M
T32*1/2M
T32*3/4M
T32*1M
T40*11/4M
T50*11/2M
T63*2M

QX174
Heavy Stop valve

SPECIFICATION	
20	50
25	63
32	75
40	90

QX175
New luxurious stop valve

SPECIFICATION
20
25
32

3. SPRINKLER SERIES

QX176
Spec: G1/2" Full circle
plastic impulse sprinkler
Pressure: 1.5–4.0bar
Range: 12–18m
Flux: 0.3–1.3m3/h

QX177
MALE PLASTIC
IMPULSE SPRINKLER
Nozzle Dia: 2.5mm
Material: ABS
Working pressure: 1.5kgs

QX178
MALE PLASTIC
Radius: 9.5m
Spec: 1/2"
Nozzle Size: 9/64"
Working pressure: 1.5kgs

QX179
Spec: G3/4 " Male
Nozzle Dia: 4.5/2.1mm
Press: 2.0–4.0Bar
Flux: 1.30–2.30m³/h
Range(r): 13–16m

QX180
Spec: G3/4''(Female)
Nozzle Dia: 4.5/2.1mm
Press: 2.0–4.0Bar
Flux: 1.30–2.30m³/h
Range(r): 13–16m

QX181
Spec: G3/4 " Male
Nozzle Dia: 4.5/2.1mm
Press: 2.0–4.0Bar
Flux: 1.30–2.30m³/h
Range(r): 13–16m

QX182
Spec: G3/4" Female
Nozzle Dia: 4.5/2.1mm
Pressure: 2.0–4.5Bar
Flux: 1.30–2.30m3/h
Range(r): 13–16 m

QX183
Spec: G3/4" Female
Nozzle Dia: 4.5/1.5mm
Pressure: 1.5–3.5Bar
Flux1.15–2.0m3/h
Range(r): 10–13 m

QX184
Spec: G1/2''(male)
Nozzle Dia: 4.0/1.5mm
Press: 1.5–3.5Bar
Flux: 1.15–1.90m³/H
Range(r): 10–13m

QX185
Spec: G1/2''(male)
Nozzle Dia: 4.0/1.5mm
Press: 1.5–3.5Bar
Flux: 1.15–1.90m³/H
Range(r): 10–13m

QX186
Spec: G1/2''(male)
Nozzle Dia: 4.0/1.5mm
Press: 1.5–3.5Bar
Flux: 1.15–1.90m³/H
Range(r): 10–13m

QX187
Spec: G3/4 " Male
Nozzle Dia: 4.5/2.1mm
Press: 2.0–3.0Bar
Flux: 1.50–2.30m³/h
Range(r): 13–16m

QX188
Spec: G3/4 " Male
Nozzle Dia: 7.0/2.9mm
Press: 2.0–5.0Bar
Flux: 2.5–7.00m³/h
Range(r): 18–25m

QX189
3 nozzles sprinkler
Spec: 1 inch Male
Pressure: 2.0~5.0bar
Flux: 2.8~8.0m³/h
Range: 12~18m

QX190
Spec: G1/2"(MALE)
Nozzles dia: 4.0mm
Pressure: 1.0–3.5Bar
Flux: 0.95–1.50m³/h
Radius: 8–13m

QX191
Spec: G3/4''(Female)
Nozzles dia: 4.0mm
Pressure: 1.0–3.5Bar
Flux: 0.95–1.50m³/h
Radius: 8–13m

QX192
Spec: G1/2" Full or part circle
plastic impulse sprinkler
Pressure: 1.5–4.0bar
Range: 12–18m
Flux: 1.5–2.3m3/h

QX193
Spec: G1/2'' Male
Nozzle Dia: 3.1mm
Pressure: 1.0–3.0Bar
Flux: 0.68–1.10 m³/h
Range(r): 6–12m

QX194
Spec: G1/2'' Male
Nozzle Dia: 3.1mm
Pressure: 1.0–3.0Bar
Flux: 0.68–1.10 m³/h
Range(r): 6–12m

QX195
Spec: G1/2'' Male
Nozzle Dia: 3.1mm
Pressure: 1.0–3.0Bar
Flux: 0.68–1.10 m³/h
Range(r): 6–12m

QX196
Spec: 1/2 " Male
Nozzle Dia: 4.0mm
Pressure: 1.5–3.5 Bar
Flux: 0.95–1.13 m³/h
BRASS & Zinc alloy

QX197
Spec: G1" Full circle
plastic impulse sprinkler
Pressure: 2.0–5.0bar
Range: 12–20m
Flux: 4.5–12.5m3/h

QX198
Spec: G3/2" Full or part circle
plastic impulse sprinkler
Pressure: 2.0–6.0bar
Range: 20–36m
Flux: 9.12–31.98m3/h

QX199
Spec: G1/2'' Male
Nozzle Dia: 3.1mm
Pressure: 1.0–3.0 Bar
Flux: 0.68–1.10 m³/h
Range(r): 6–12m

3. SPRAY GUNS NOZZLE AND CONNECTOR

Item name	spray nozzle
Material	ABS+TPR
Patterns	cone jet line center soaker shower
Color	Green/orange/blue/black/red/customizable
Connector	European type/ American type
Working pressure	10 bar
Package details	Opp bags/Color box/Round box
Application	water flowers,plants,wash cars ,etc.
MOQ	1000 pcs
Sample	free,freight collect
Sample time	send out within 3 days,receive a week or so

QX200

3. PVC LAYFLAT HOSE

SIZE	3/4”–16”
Length:	100M, 50M, 30M
Thickness:	1mm to 3mm
Standard:	ISO9001:2008
Color:	Blue, Orange, Yellow, Red, etc
Working Pressure:	2–10bar
Working Temperature:	–5℃ to +65℃
Features:	Durable, Light Weight with High Pressure
Transporting Medium:	Water, Oil, Liquid Fertilizer, Chemical Liquid

QX203

Size	ID	W.P				WEIGHT/100M			
Inch	mm	BAR				KG			
		THICKNESS (mm)							
		4BAR	6BAR	8BAR	10BAR	4BAR	6BAR	8BAR	10BAR
1	25	1.30	1.50	1.60	1.70	17	16	18	20
1.25	33	1.20	1.30	1.40	1.45	19	18	20	21
1.5	40	1.25	1.45	1.80	1.90	23	23	26	29
2	53	1.20	1.30	1.90	2.05	25	26	40	42
2.5	65	1.15	1.70	2.00	2.15	32	40	50	54
3	76	1.10	1.45	2.10	2.25	38	50	70	80
4	102	1.25	2.30	2.50	2.55	55	70	95	100
5	125	1.35	2.30	2.60	/	80	108	150	/
6	152	1.35	2.40	2.80	/	90	120	200	/
8	204	2.20	2.65	3.00	/	178	202		/
10	255	2.65	/		/	265	/		/
12	306	2.20	/		/	290	/		/

3. GREENHOUSE ACCESSORIES (STEEL LOCK AND STEEL SPRING)

Galvanized steel & Aluminum profile/lock channel

- Used for greenhouse film
- Long service life with anti–rust
- Sturdy and durable
- Anti–aging, light in weight
- Elegant appearance

Model	Tickness	Width	Length
QX201	0.7mm	30mm	4M
	0.8mm	30mm	4M
	0.9mm	30mm	4M
	1.0mm	30mm	4M
	1.2mm	30mm	4M
	1.6mm	33mm	4M

QX202

Item Description	Plastic coated	Normal dipping plastic coated	High–intensity dipping plastic coated
	wiggle wire	wiggle wire	wiggle wire
Diamater	2.3mm	2.5mm	2.7mm
length after Installed	2m	2m	2.2m
Sawthooth Depth	32mm	32mm	37mm
Hardened Stell	NO	NO	YES
Cover Plastic	nonsticking	sticking	super sticking
	easy to loose		ingrained
Life Time	2–3years	5years	above 10 years

3. GARDEN WATER TIMER

QX204

MAGNETIC VALVE TYPE

Body: ABS
Connector in Body: POM No Connect at both ends
Transparent cover: GPPS

QX205

BALL VALVE TYPE

Body: ABS
Connector in Body: POM No Connect at both ends
Transparent cover: GPPS

3. ALUMINUM ALLOY AND PP CONNECTOR FOR LAYFLAT HOSE USE

QX206 | **TYPE A**
Male Adapter X Female

Size (in.)	
1/2”	2–1/2”
3/4”	3”
1”	4”
1–1/4”	5”
1–1/2”	6”
2”	8”

QX210 | **TYPE B**
Female Coupler X Male

Size (in.)	
1/2”	2–1/2”
3/4”	3”
1”	4”
1–1/4”	5”
1–1/2”	6”
2”	8”

QX207 | **TYPE C**
Female Coupler X Hose Shank

Size (in.)	
1/2”	2–1/2”
3/4”	3”
1”	4”
1–1/4”	5”
1–1/2”	6”
2”	8”

QX211 | **TYPE D**
Female Coupler X Female

Size (in.)	
1/2”	2–1/2”
3/4”	3”
1”	4”
1–1/4”	5”
1–1/2”	6”
2”	8”

QX208 | **TYPE E**
Male Coupler X Hose Shank

Size (in.)	
1/2”	2–1/2”
3/4”	3”
1”	4”
1–1/4”	5”
1–1/2”	6”
2”	8”

QX212 | **TYPE F**
Male Adapter X Male

Size (in.)	
1/2”	2–1/2”
3/4”	3”
1”	4”
1–1/4”	5”
1–1/2”	6”
2”	8”

QX209 | **TYPE DC**
Dust Cap

Size (in.)	
1/2”	2–1/2”
3/4”	3”
1”	4”
1–1/4”	5”
1–1/2”	6”
2”	8”

QX213 | **TYPE DP**
Dust Plug

Size (in.)	
1/2”	2–1/2”
3/4”	3”
1”	4”
1–1/4”	5”
1–1/2”	6”
2”	8”

3. SEED TRAY

Material: PS
Thickness: 0.8mm, 1.0mm, 1.1mm, 1.2mm

QX214	QX215	QX216	QX217
21 CELL	28 CELL	32 CELL	32 CELL
Seed tray	Seed tray	Seed tray	Forest wood cell
Top and bottom size: 62*30mm	Top and bottom size: 62*30mm	Top and bottom size: 60*28mm	Top and bottom size: 60*20mm
depth: 65mm	depth: 65mm	depth: 55mm	depth: 120mm

QX218	QX219	QX220	QX221
50 CELL	50 CELL	72 CELL	98 CELL
Forest wood cell	Seed tray	Seed tray	Seed tray
Top and bottom size: 50*20mm	Top and bottom size: 48*25mm	Top and bottom size: 40*20mm	Top and bottom size: 32*17mm
depth: 85mm	depth: 45mm	depth: 45mm	depth: 40mm

QX222	QX223	QX224	QX225
105 CELL	128 CELL	200 CELL	162 CELL
Seed tray	Seed tray	Seed tray	Seed tray
Top and bottom size: 32*17mm	Top and bottom size: 30*16mm	Top and bottom size: 23*10mm	Top and bottom size: 26*12mm
depth: 35mm	depth: 40mm	depth: 42mm	depth: 43mm

QX226	QX227	QX228	QX229
200 CELL	105 CELL	128 CELL	288 CELL
Seed tray	Seed tray	Seed tray	Seed tray
Top and bottom size: 23*10mm	Top and bottom size: 32*19mm	Top and bottom size: 29*17mm	Top and bottom size: 19*8mm
depth: 43mm	depth: 60mm	depth: 49mm	depth: 37mm